REV	DESCRIPTION	DATE	

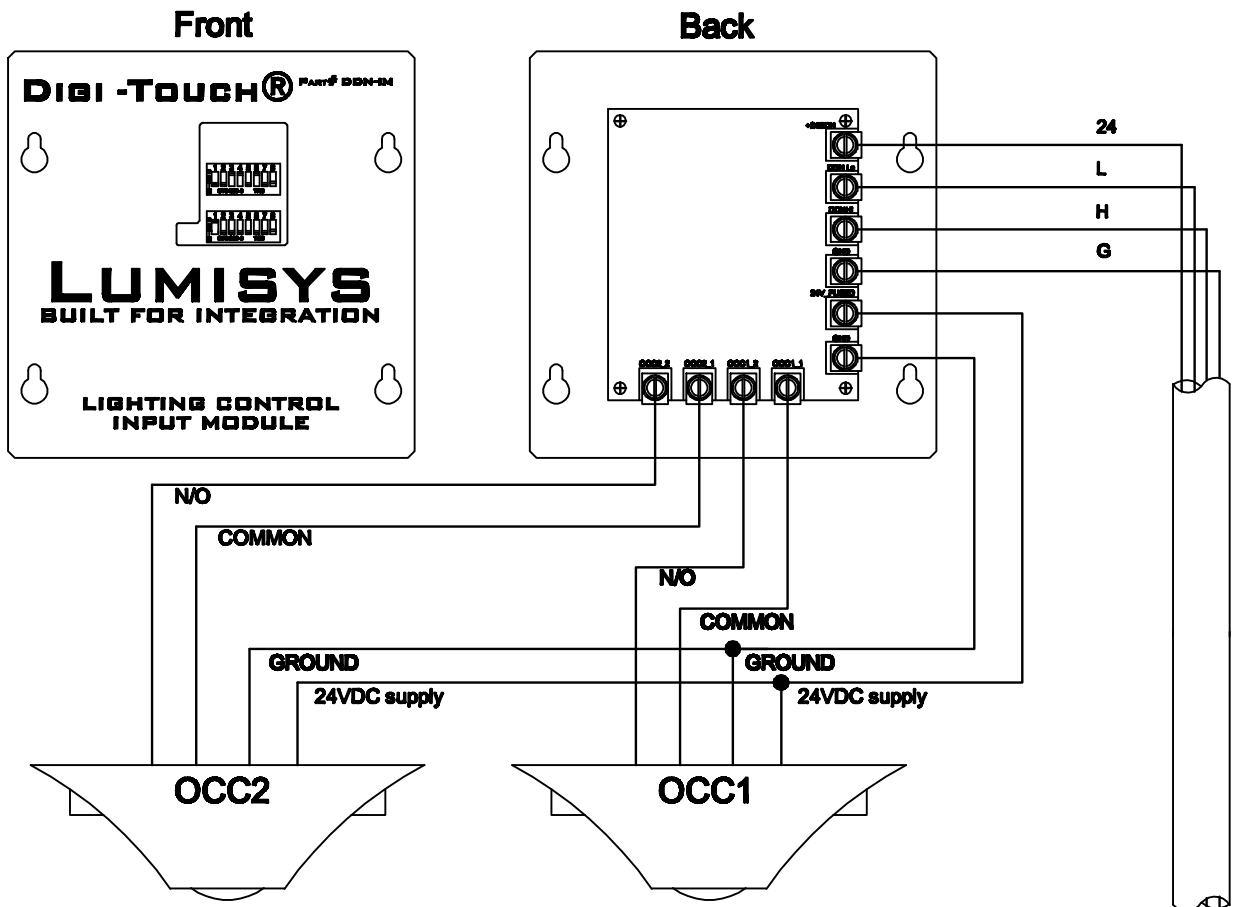

Occupancy sensors with isolated relays .

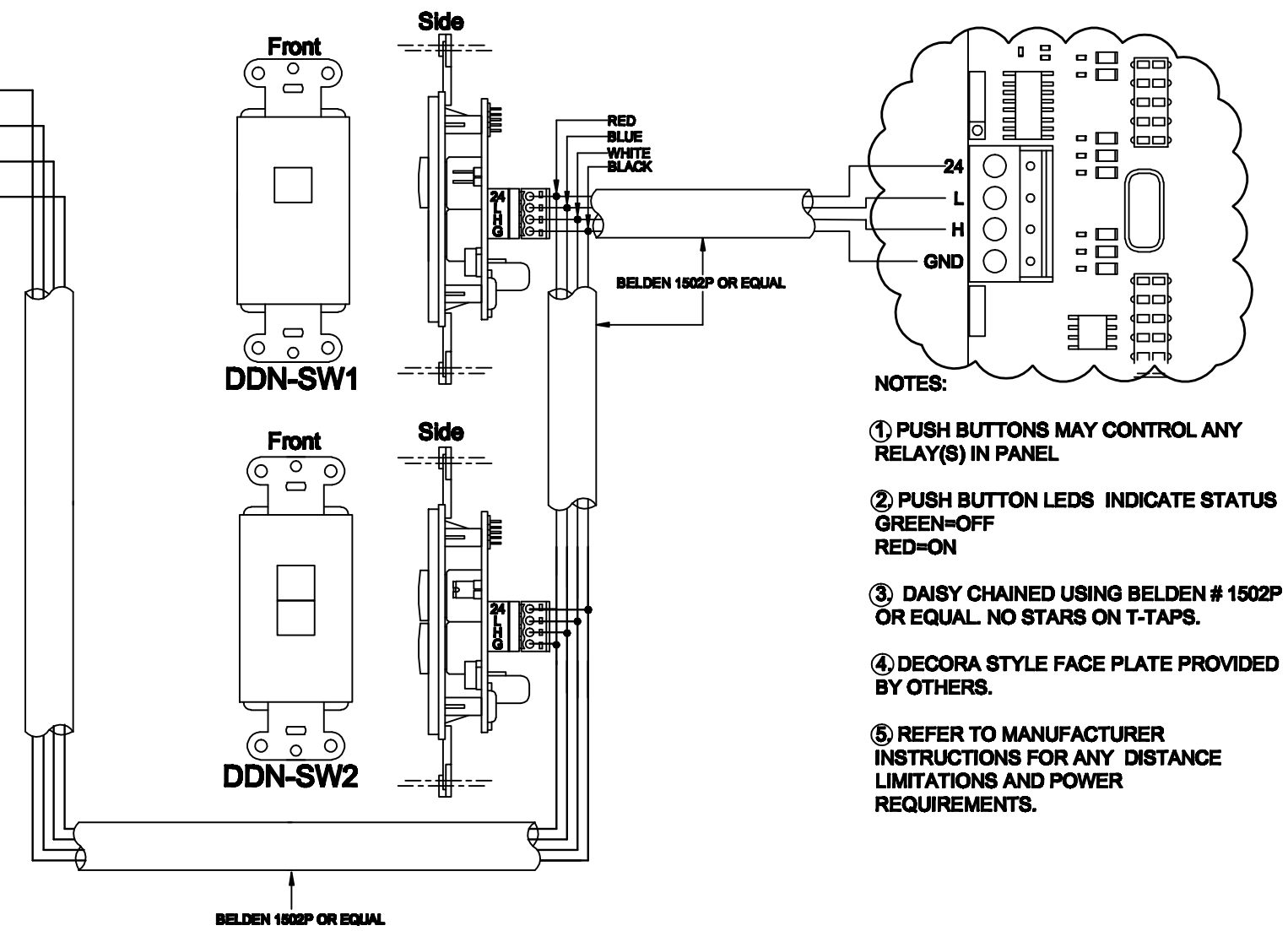

NOTES:

① PUSH BUTTONS MAY CONTROL ANY RELAY(S) IN PANEL

② PUSH BUTTON LEDS INDICATE STATUS
GREEN=OFF
RED=ON

③ DAISY CHAINED USING BELDEN # 1502P OR EQUAL. NO STARS ON T-TAPS.

④ DECORA STYLE FACE PLATE PROVIDED BY OTHERS.

⑤ REFER TO MANUFACTURER INSTRUCTIONS FOR ANY DISTANCE LIMITATIONS AND POWER REQUIREMENTS.

DETAIL A
TYP. DIGI-TOUCH NETWORK WIRING

DWN Q.O.T	3-02-09	LUMISYS
APV MMM	3-02-09	TYPICAL DIGI-TOUCH NETWORK DETAIL

TOLERANCES
3 PLACE DECIMALS +/- .010
2 PLACE DECIMALS +/- .020
1 PLACE DECIMALS +/- .030
FRACTIONS +/- ANGLES +/- 30'
FINISH

MODEL
DRAWING NO. DTND
FILE NAME DTND_PW_SO
SCALE NONE
SHEET 1 OF 1
REVISION